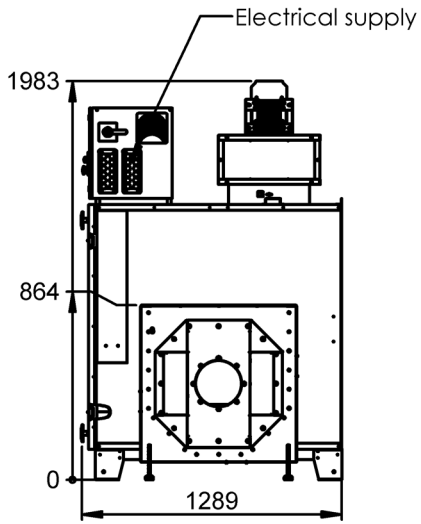

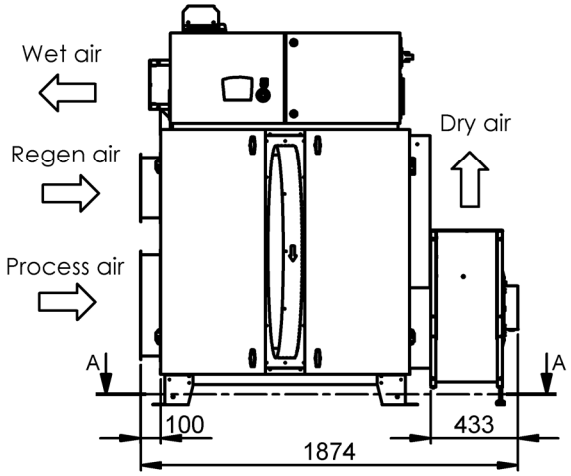

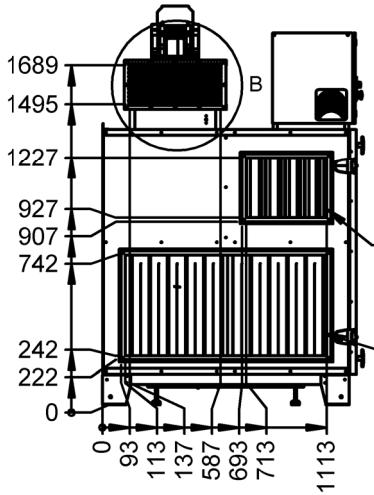

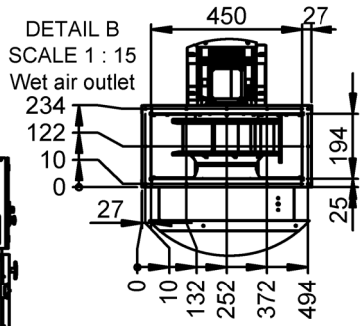

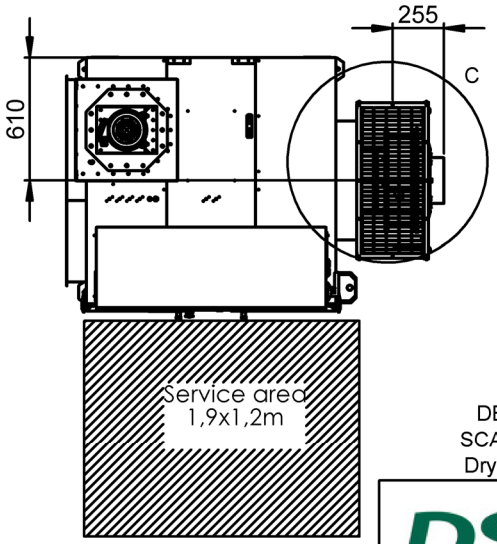

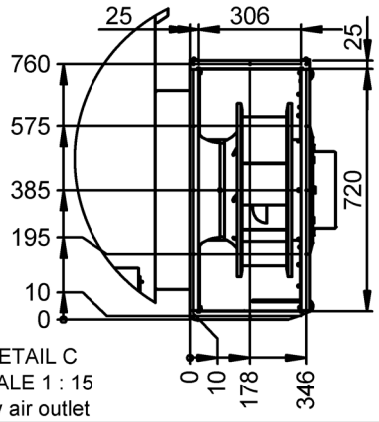

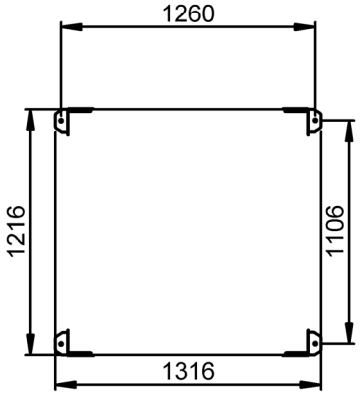

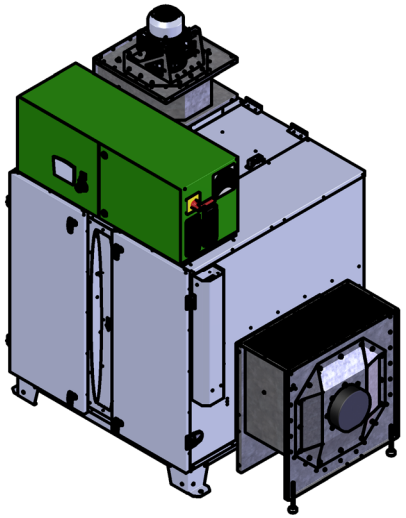

This document and its contents are the exclusive property of DST Seibu Giken and must not be copied, reproduced, transmitted or communicated to any other party or used for purposes not expressly permitted by us.

DST

Designed by: AP	Date: 2018-05-18	Title/Description: Installation drawing **RLZ-102R**
Drawn by: Aynur Polat	Date: 2018-06-26	
Approved by: EL	Date: 2024-01-30	
Protective Finish	Material	Thickness: t=
Seibu Giken DST AB +46 8 445 77 20 www.dst-sg.com	Status: Approved	Tolerance
Scale: 1:50	Format: A3	Sheet/Sheet: 1/1
Rev Part: 05	Weight (Kg): 502.000	
Drawing no: DST10388	Rev: 06	